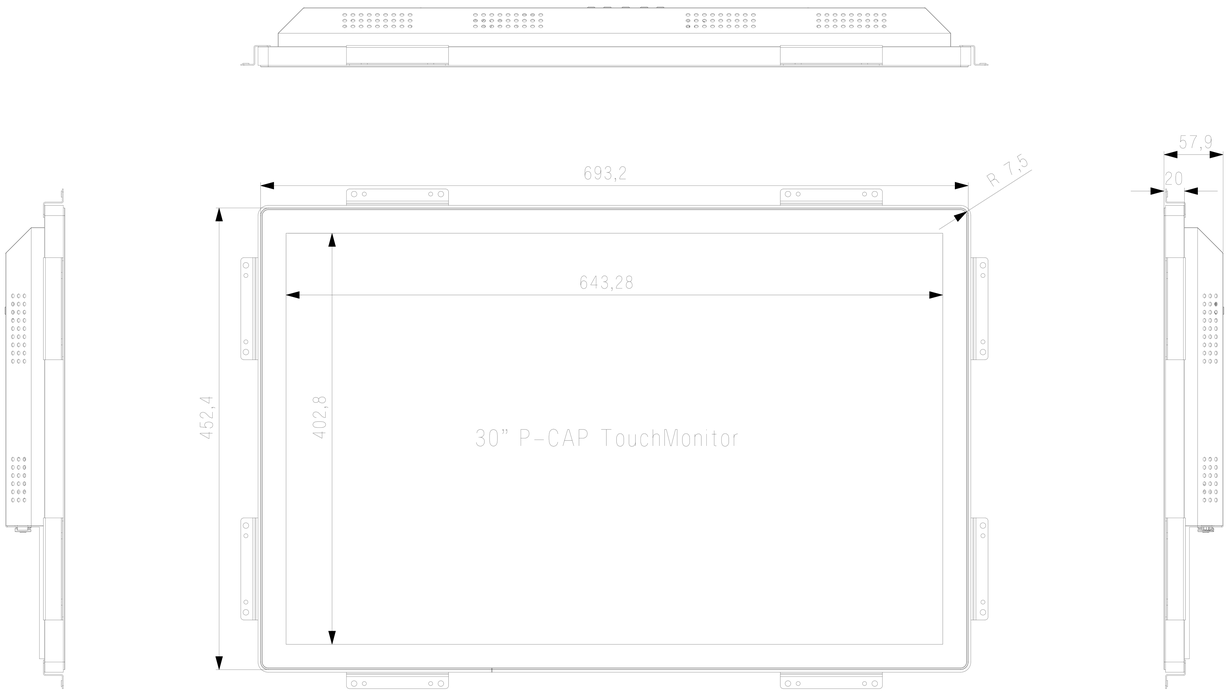

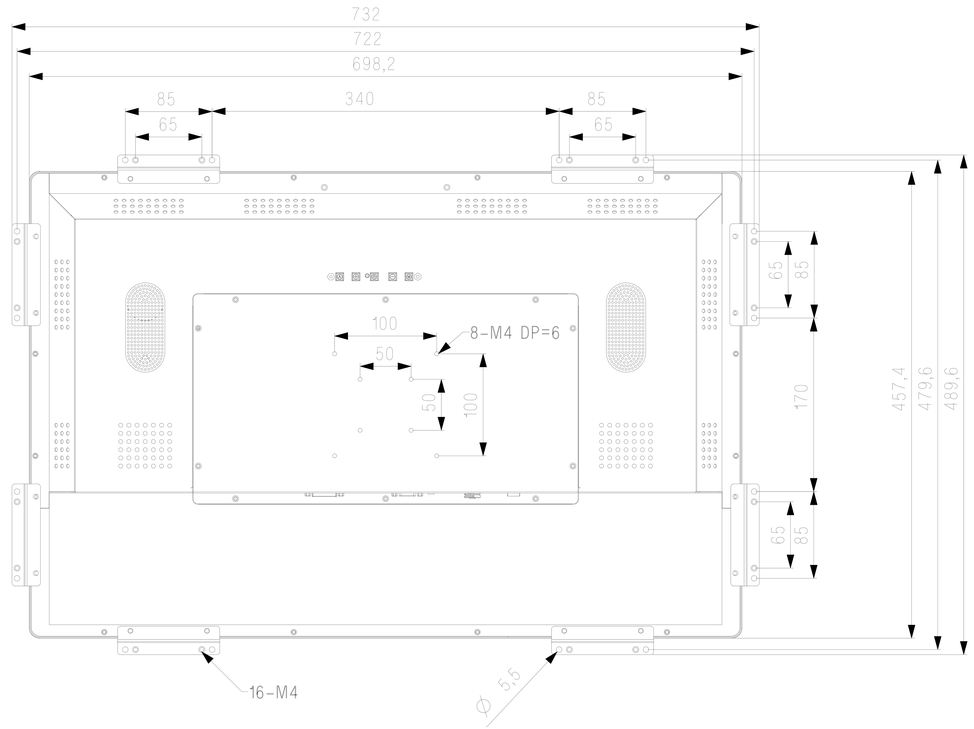

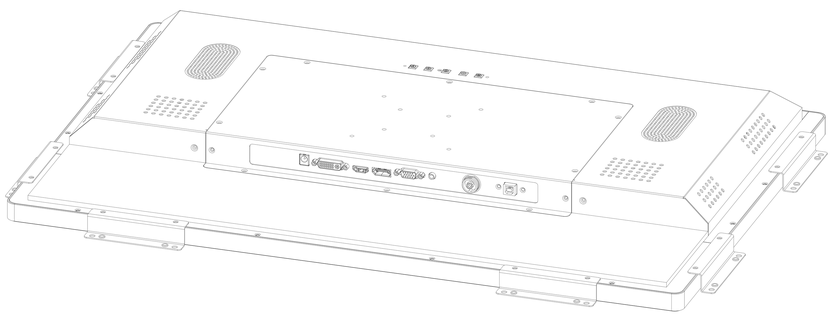

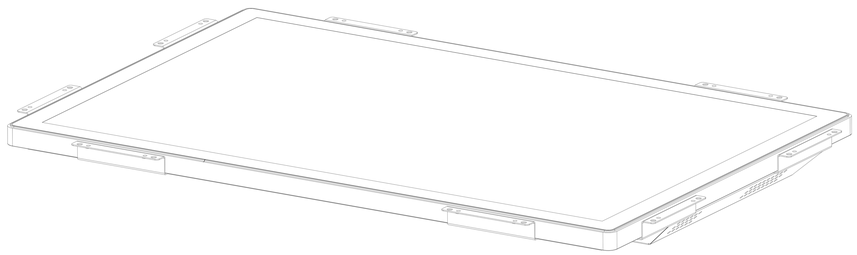

DIMENSIONS ARE IN MILLIMETERS

2024-01-05